HPE motor/pump

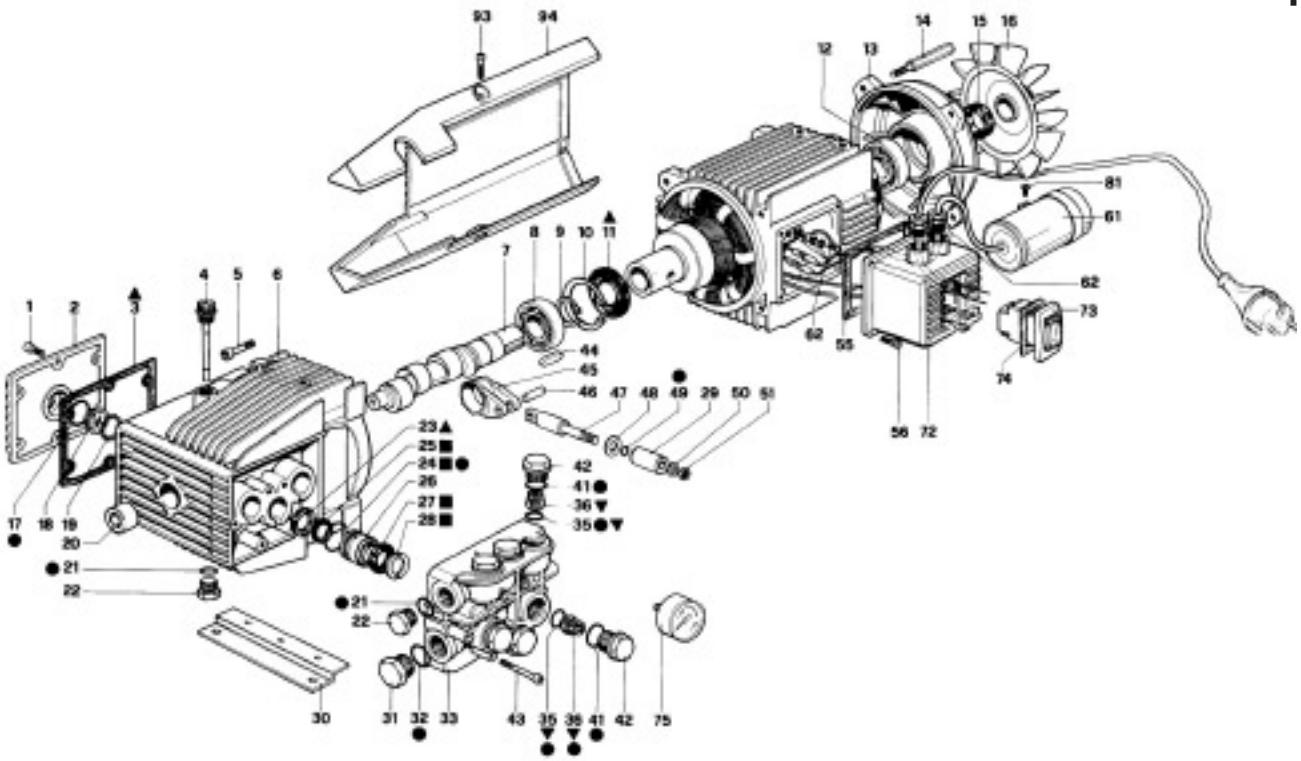

Pos	Code	Description	Qty
1	1260760	Screw TCEI M5x20	6
2	1260030	Side Cover	1
3	1260040	Side Cover Gasket	1
4	1260480	Oil Dipstick	1
5	1260780	Screw TCEI M5x25mm	4
6	1260010	Pump Housing	1
7	1260170	Solid Shaft (3)	1
	1260180	Solid Shaft (4)	1
	1260190	Solid Shaft (5)	1
8	180400	Shaft Bearing 25x52x15 6205	1
9	1260770	Circlip Ø 25mm	1
10	1260790	Circlip Ø 52mm	1
11	1260750	Seal 25x52x7mm	1
12	1260950	Bearing 25x52x15 6205- 27	1
13	1260960	Motor Plate	1
14	1260360	Screw Extension	4
15	1260970	Washer Seal	1
16	1260300	Fan	1
17	1140450	O-Ring Ø 20.24x2.62mm	1
18	1260250	Oil Sight Glass	1
19	1260430	Snap Ring ZJ 25	1
20	1260050	Roller Bearing	1
21	740290	O-Ring Ø 14x1.78mm	2
22	880530	Plug 3/8" Gas Thread	2
23	1260460	Oil Seal 15x24x5mm	3
24	1260420	O-Ring Ø 26.70x1.78mm	3
25	1260440	Low Pressure Gasket Ø 15mm	3
26	1260151	Piston Guide Ø 15mm	3
27	1260130	High Pressure Gasket Ø 15mm	3
28	1260140	Support Ring Ø 15mm	3
29	1260120	Piston Ø 15mm	3
30	1260830	Base Plate	2
31	820360	Plug 1/2" Gas Thread	1

Pos	Code	Description	Qty
32	180101	O-Ring Ø 17.5x2mm	1
33	1260020	Pump Head - Aluminum	1
34	1261760	Screw TEN 3, 9x13	6
35	880830	O-Ring Ø 15.54x2.62mm	6
36	1269050	Complete Valve	6
41	960160	O-Ring Ø 17.86x2.62mm	6
42	1260162	Valve Cap	6
43	680570	Screw TCEI M6x60	6
44	1380520	Key A8x7x25mm	1
45	1260060	Con Rod - Aluminum	3
46	1260080	Piston Pin $Ø_E$7x24mm	3
47	1260070	Piston Guide	3
48	1260091	Washer	3
49	480480	O-Ring Ø 4.48x1.78mm	3
50	1260100	Spacer Washer 8x13x0.5mm	3
51	1260110	Nut M8	3
52	1260470	Screw TE M8x10mm	4
53	740420	Plate Screw Terminal	4
54	1269100	Ground Terminal	1
55	1260400	Switch Box Gasket	1
56	1261560	Screw 3.9x16mm	4
57	1260340	Switch Box Cover(not shown)	1
58	1263320	Switch 20A (not shown)	1
61	1263530	Capacitor 45 µF	1
	1263550	Capacitor 80 µF	1
62	1269090	Cable Retainer	2
63	1261210	Plug CEE (7) VII	1
	1265590	Plug CEE (7) VII	1
64	1260390	Detergent Tube (not shown)	
67	850250	Screw TCEI M8x12 (not shown)	4
68	1265250	Top Cover - Yellow(not shown)	1
	1265252	Top Cover - Orange(not shown)	1
	1265253	Top Cover - Black (not shown)	1

Pos	Code	Description	Qty
69	1263000	Fan Cover	1
74	1261410	Switch Box	1
75	1261240	Switch	1
76	1262370	Cord Guide	1
	1263760	Cord Guide	1
80	1265080	Switch Gasket	1
81	1260810	Screw TCTC M4x10	1
82	1265180	Switch Bracket (not shown)	1
83	14880	RT-UR-C	1

Repair Kits

Kit 1864 Valves ▼

Pos	Qty.
35	6
36	6

Kit 1865 Oil Seals ▲

Pos	Qty.
3	1
11	1
23	3

Kit 1866 Water Seals ■

Pos	Qty.
24	3
25	3
27	3
28	3

Kit 2040 O-Ring ●

Pos	Qty.	Pos	Qty.
17	1	35	6
21	2	41	6
24	3	49	3
32	1		